SARA
1967

## SPECIFICATION SHEET

TREDEX

### Photo

### Product Information

| | |
|---|---|
| **Item Descriptions:** | Hand shower with 1500 mm hose and holder |
| **Model:** | TS+ |
| **Article No:** | TRS0090.BNC |
| **Material:** | Brass |
| **Brand:** | TREDEX |
| **Finish:** | The colour / finish may vary on actual<br>Brushed Neutral Copper_BNC |

**Specifications:**

Brass shower set with 1500 mm stainless steel double lock shower hose. Brass holder.
With flow rate (at 3 bar) 6.19 l/min.

**PermaFinish**
PVD brilliant and long-lasting finish

**Eco-Mix**
Air-infused water provides a luxurious water experience while using lesser water.

**Rain**
Comfortable water flow and even cover flow.

**Quick Clean**
Enables manual limescale removal.

**Eco-Flo**
Water and energy savings for ecological and economical reasons.
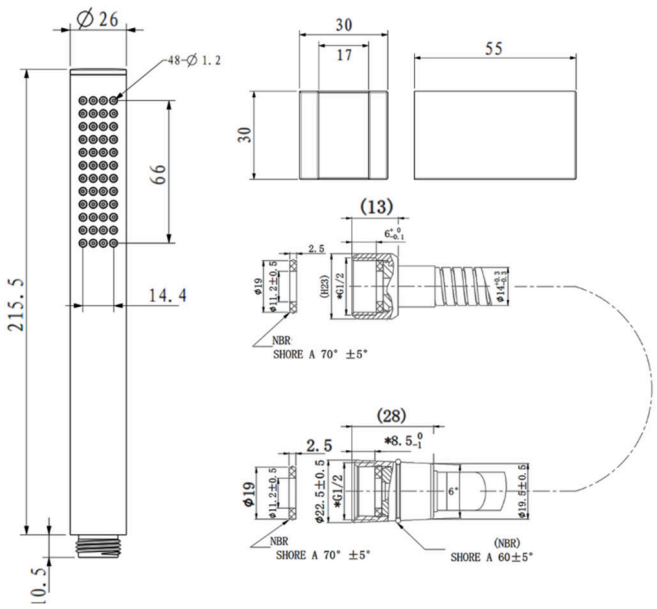
## TECHNICAL DRAWING