SARA
1967

SPECIFICATION SHEET

TREDEX

Photo

Product Information

Item Descriptions:0	40cm round stainless-steel shower head and wall arm
Model:	UNIVERSAL
Article No:	TRR00910
Material:	Stainless Steel/Brass
Brand:	TREDEX
Finish:	The colour / finish may vary on actual Chrome

Specifications:

40cm round stainless-steel shower head and 40cm Wall mounted round brass shower arm. With flow rate (at 3 bar) 8.12 l/min.

Platinum Warranty
Extended, reliable warranty designed for complete peace of mind.

Perma Shine
Durable, long lasting brilliant finish ensuring a high gloss, mirror-like shine.

Eco-Mix
Air-infused water provides a luxurious water experience while using lesser water.

Super Size
Extra large spray area allowing better coverage pattern & enhance relaxing experience

Rain
Comfortable water flow and even cover flow.

Quick Clean
Enables manual limescale removal.

ExSteel
ExSteel faucets are produced from solid-grade 304 stainless steel.

Eco-Flo
Water and energy savings for ecological and economical reasons.
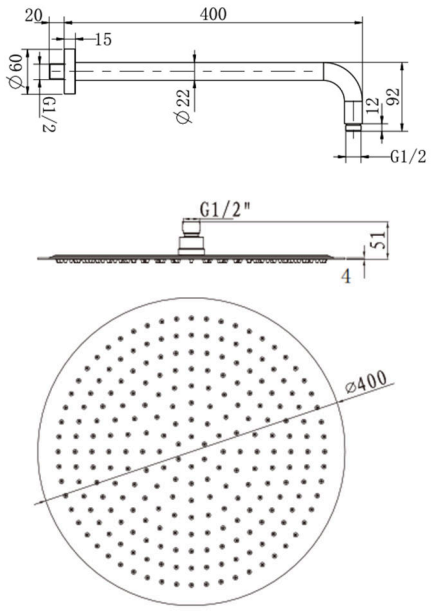
TECHNICAL DRAWING