SARA
1967

SPECIFICATION SHEET

TREDEX

Photo

Product Information

Item Descriptions:	Round shaving and cosmetic mirror with light
Model:	TREDEX
Article No:	TRCM10294.BG
Material:	Various Material
Brand:	TREDEX
Finish:	The colour / finish may vary on actual Mirror / Brushed Gold

Specifications:

T-Switch
Shaving and cosmetic mirror with LED light
With 2 swiveling arm
Length: 201 mm
Width: 345 mm
Height: 319 mm
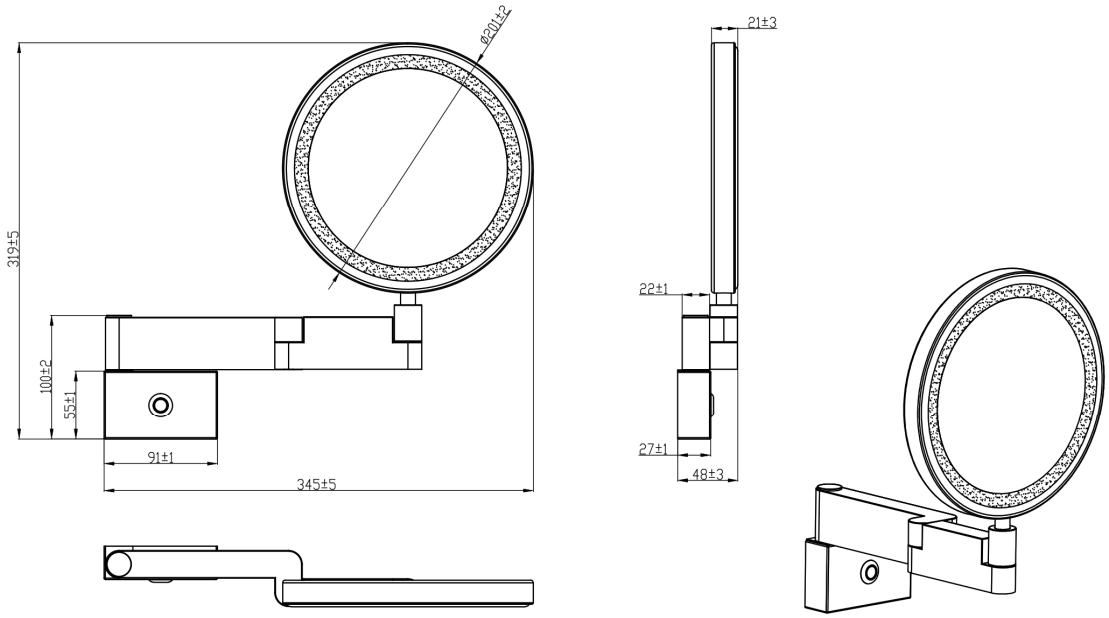
TECHNICAL DRAWING