SARA
1967

SPECIFICATION SHEET

TREDEX

Photo

TECHNICAL DRAWING

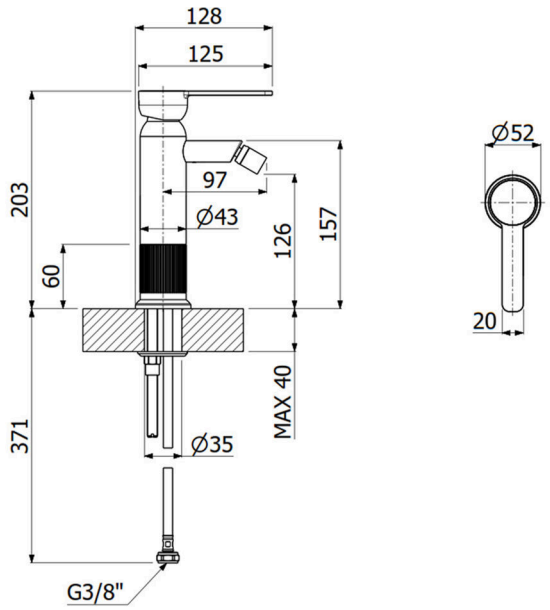

Product Information

Item Descriptions:	Single lever bidet mixer with pop-up waste set
Model:	SUPREME
Article No:	330082
Material:	Brass
Brand:	TREDEX
Finish:	The colour / finish may vary on actual Matte Bourbon_MBN

Specifications:

Single lever bidet mixer
With pair of flexible connection hoses. With pop-up waste set, with flow rate (3 bar) 8.01 l/min
Length: 128 mm
Width: 52 mm
Height: 203 mm

Platinum Warranty
Extended, reliable warranty designed for complete peace of mind.

ForeverEndurance
Completed an endurance test, surpassing half a million cycles.

Ex-Brass
Enhanced health protection resulting from minimal lead content.

Eco-Mix
Air-infused water provides a luxurious water experience while using lesser water.

Flexi Move
Allow the achievement of the highest levels of precision, comfort, desired water flow & temperature.

Flexi Space
Ample space between spout and handle ensuring easier use.

Eco-Flo
Water and energy savings for ecological and economical reasons.